Einstein for Everyone Lecture 7: General Relativity and Cosmology

Dr. Erik Curiel

Munich Center For Mathematical Philosophy
Ludwig-Maximilians-Universität

Ehrenfest's Disk

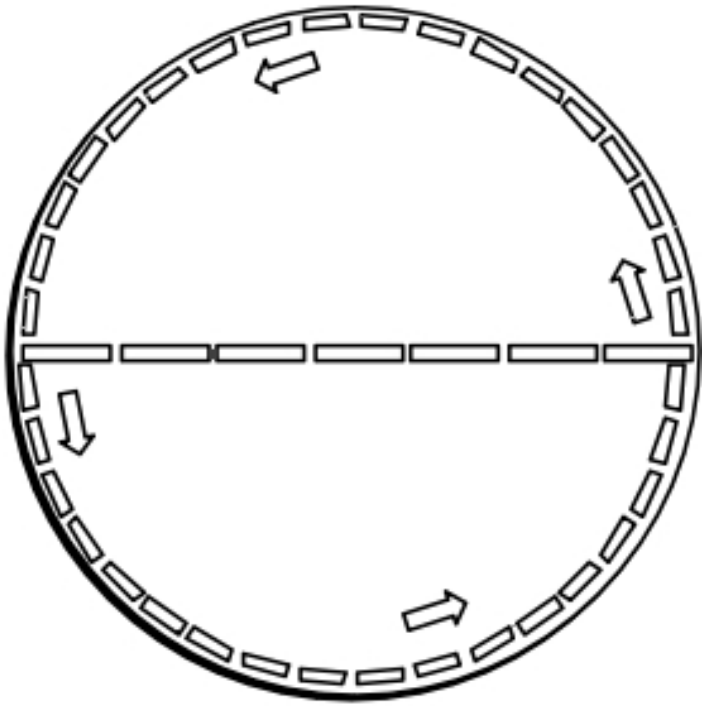

- Length contraction $\rightarrow$ rods along edge *shorter*, along radius *same length*
- Conclusion: $C > 2\pi R$
- Einstein: gravity should be represented using non-Euclidean geometry!

Spacetime Geometry: The Final Piece

1907 Einstein's first stab at "generalizing relativity"

- Guiding idea: treat gravity and inertia as linked, same theoretical structure
- Equivalence principle: results for special cases
- Not clear how to generalize the idea

1912 Gravity as spacetime curvature!

- Represent gravity (and inertia) as spacetime curvature
- Need spaces of *variable curvature*

Recap: Curvature and Geodesic Deviation

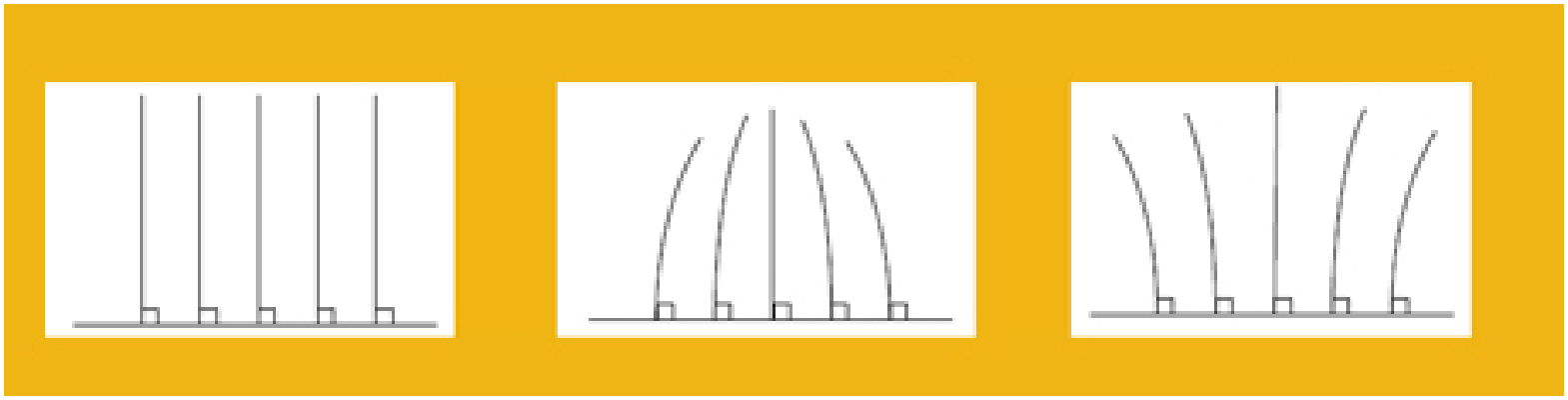

Behavior of nearby initially parallel lines, reflects curvature

Central Insight

Spacetime tells matter how to move, and matter tells spacetime how to curve. (John Wheeler)

- Curvature $\rightarrow$ geodesics
- Freely falling matter moves along geodesics
- Matter-energy density $\rightarrow$ curvature
- More matter and energy, *greater* curvature

Spacetime Trajectories

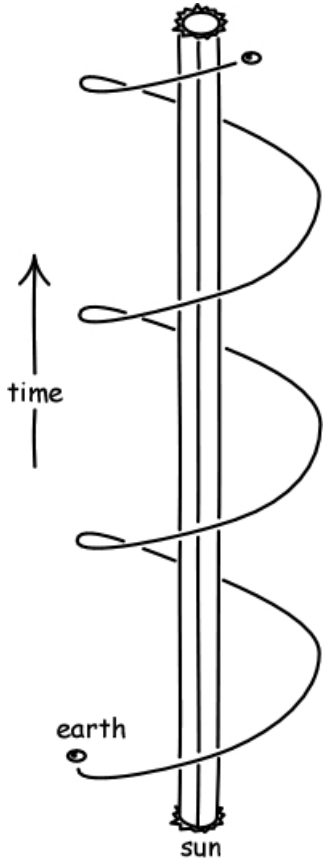

- Matter tells spacetime how to curve...

  Sun's mass $\rightarrow$ curved spacetime geometry
- Spacetime tells matter how to move...

  Earth follows geodesic (free fall trajectory)

Analogy: Two Volume Sets

Volume I: Spacetime Geometry

- List of spacetime points: $p, q, \ldots$
- Spacetime distance between each point and other nearby points
- Determines geometry: curvature at each point, distance between other points (along a particular curve)

Volume II: Mass-Energy Density

- List of spacetime points: $p, q, \ldots$
- Mass-energy density at each point
- Total mass-energy, includes *all* different types of matter

Analogy: Two Volume Sets

Volume I: Spacetime Geometry

- List of spacetime points: $p, q, \ldots$
- Spacetime distance between each point and other nearby points

Volume II: Mass-Energy Density

- List of spacetime points: $p, q, \ldots$
- Mass-energy density at each point

Einstein's Field Equations

$$\text{Curvature} = \kappa \text{ Mass-Energy Density}$$

Selects Two-Volume sets that are *physically possible*

Conceptual Contrasts

Geometrized Newton

- Curvature in *spacetime* but not space
- Spatial geometry Euclidean
- No maximum velocity; no light cones
- Spacetime curvature determined by mass

General Relativity

- Curvature in timelike and spatial directions
- Spacetime geometry locally Minkowski
- Curvature determined by mass-energy

Empirical Contrast

- *General Agreement* for most situations
  - Weak gravity, low relative velocities $\rightarrow$ GR predicts same results as Newton's theory
  - *Difficult* to detect differences between the two theories
- Testing General Relativity
  - Strong gravity, high relative velocities
  - Strongest gravity in solar system: close to the sun, Mercury's orbit (still *very small difference*!)
  - New phenomena: black holes, cosmology

Contrast with Special Relativity

lightcones no longer uniform: tipped, contracted, dilated, twisted with respect to each other, encoding curvature

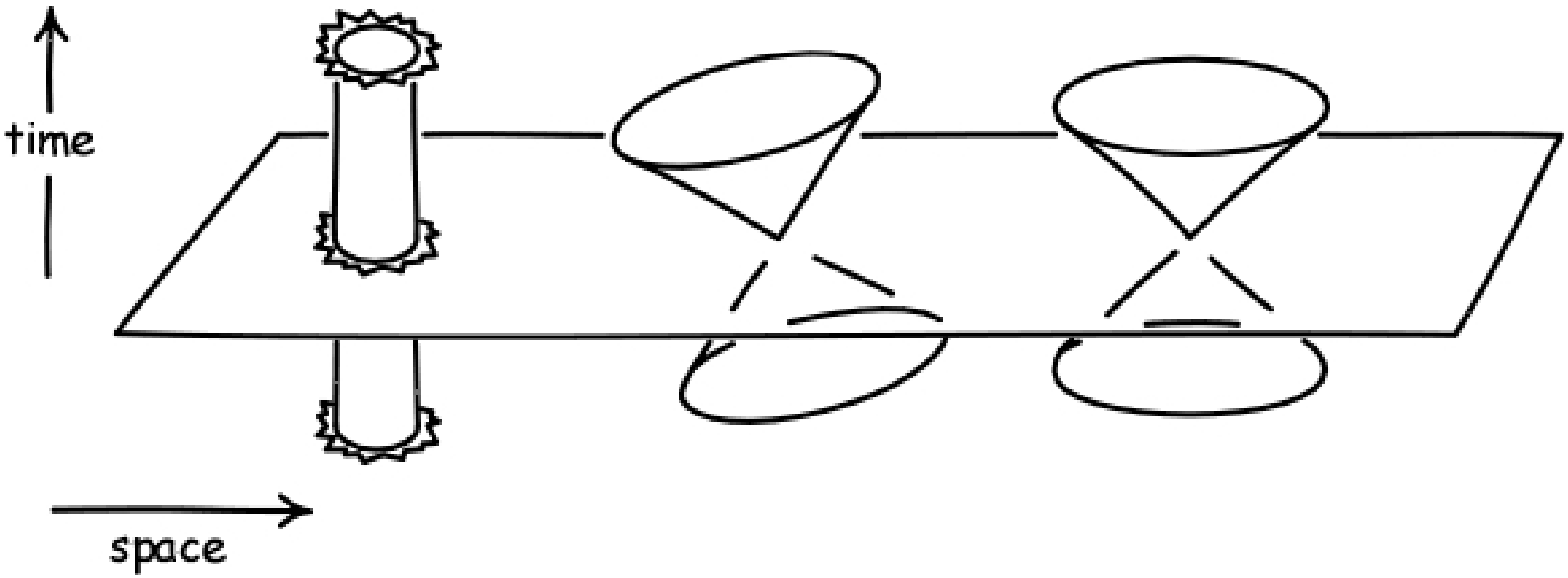

Spacetime Now a "Dynamical" Entity

Minkowski Spacetime

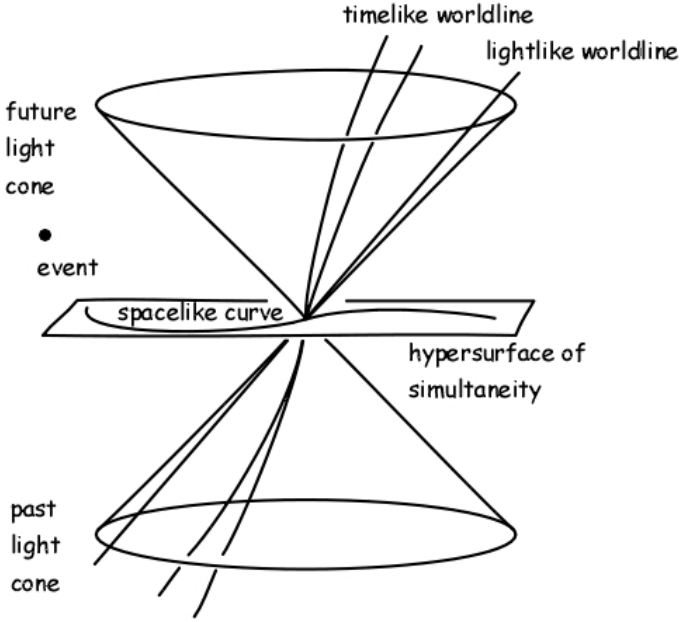

General Relativistic Spacetimes

- Locally Minkowskian
- Dynamical: depends on mass distribution, not "background structure"

Desirable Features of Physical Theories

1. Selection of particular models of what is "physically possible"
   - More restrictive $\rightarrow$ more informative
   - **GR** Einstein's equations: *very* restrictive
2. Ability to calculate consequences in variety of situations
   - Derive predictions for variety of cases
   - **GR** *In principle* can calculate consequences from Einstein's equations; *in practice* quite difficult

Desirable Features of Physical Theories

3 The actual world can be accurately described by one of the physically possible models

- Cannot check *all* features of a model with the actual world: experimental and predictive limitations
- Restriction to limited domains of applicability

GR GR adequate within classical domain (excluding quantum effects)

Orbital Motion

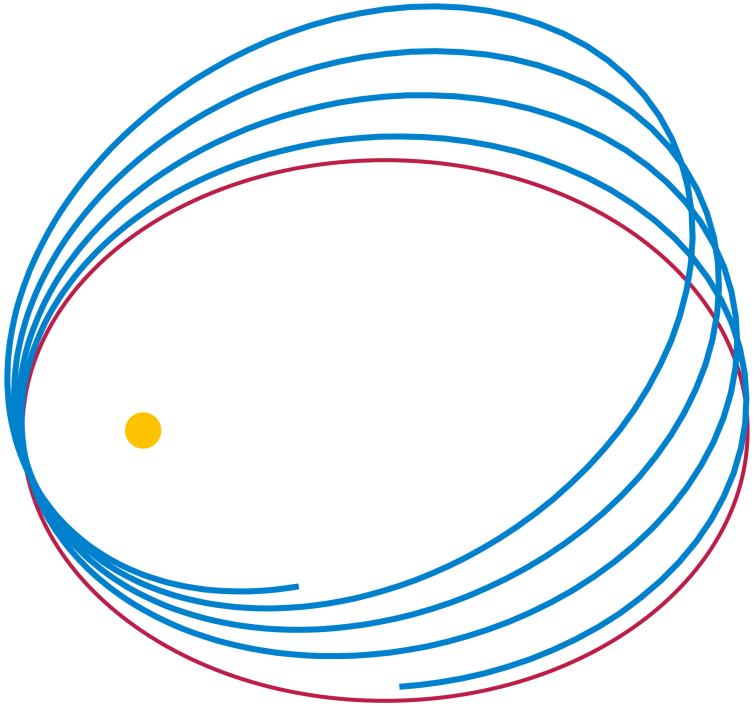

- Differences in Geometry
  - Largest near the Sun
  - Precession
- Mercury's Perihelion
  - Einstein (1915): "heart palpitations," loss of sleep when he calculates the correct result

Light Bending: Eclipse Expedition

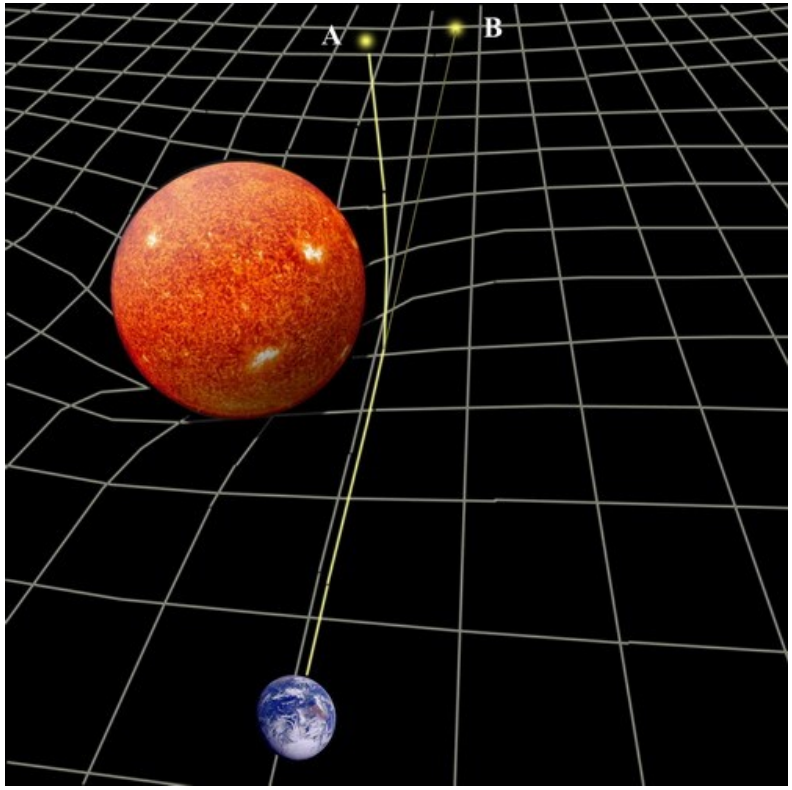

Light bending around the sun, from physicsoftheuniverse.com

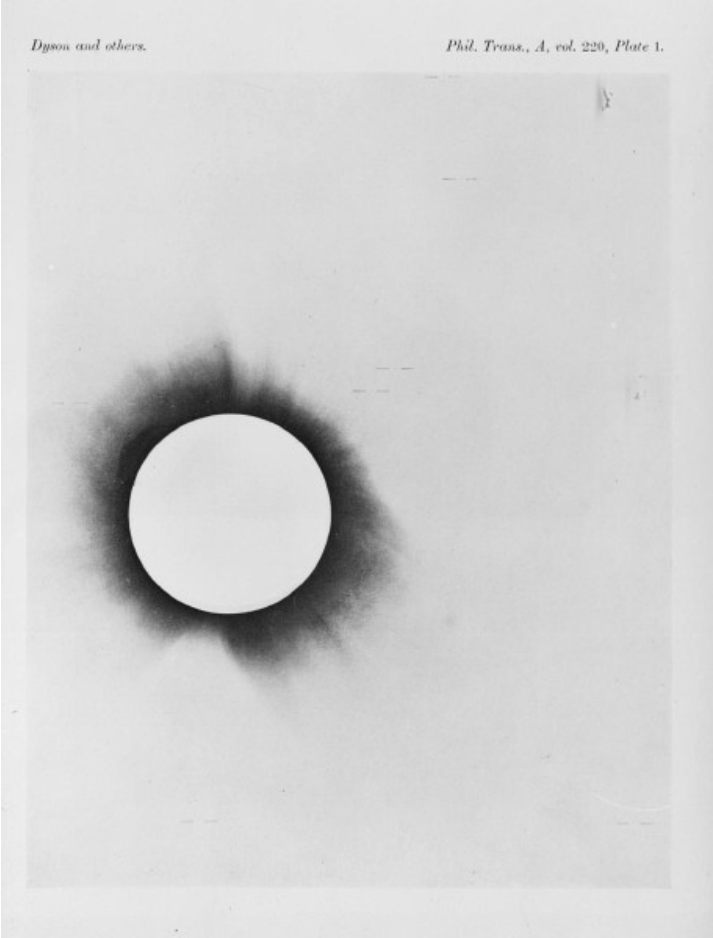

Images from Eddington's observations in Principe

Gravitational Red-Shift

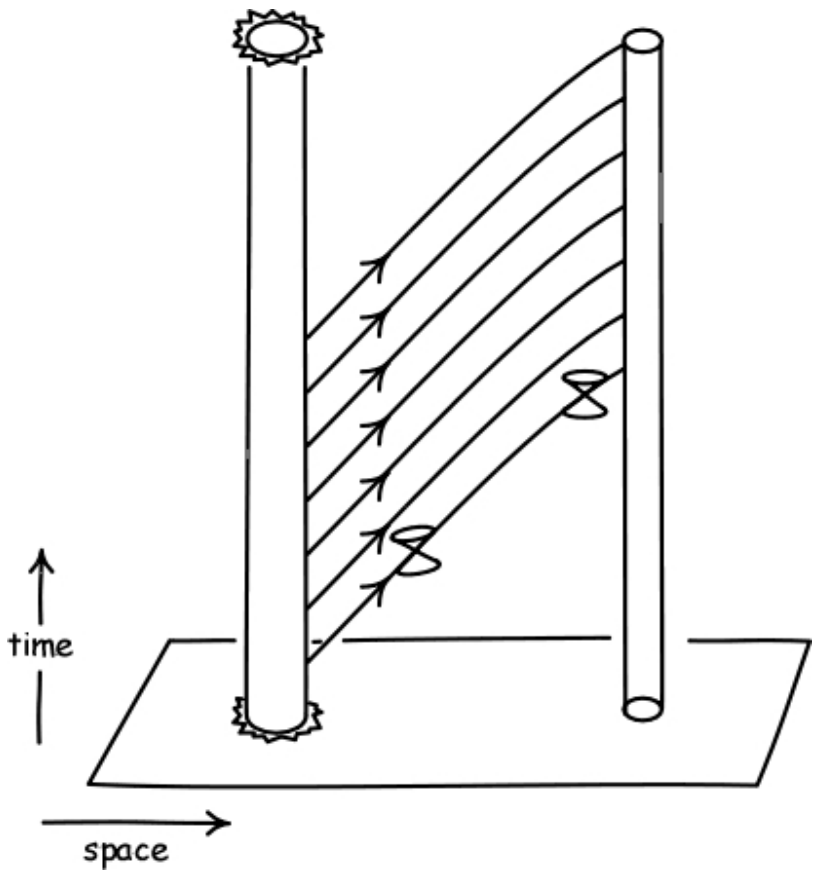

- Vibrating atom emits regular pulses near sun
- *Effect of curvature*: light pulses "spread apart"
- Distant observer: pulses arrive at a slower rate; red-shift for light

  Incredibly small effect for the sun ($.00002\%$)

Current Status of "Classical Tests"

- Classical Tests (ca. 1925)
  - Clear predictions from GR in 1916 for: orbital motion, light-bending, gravitational red-shift
  - All initially in agreement with GR
  - "Theorists' paradise but experimenters' purgatory"
- Current empirical status of GR?
  - Renaissance of empirical testing in the 1960s
  - Wide variety of other types of evidence: gravitational radiation; frame-dragging; black holes; cosmology; ...
  - No direct observation of gravitational radiation yet ...

Practical Implications of GR?

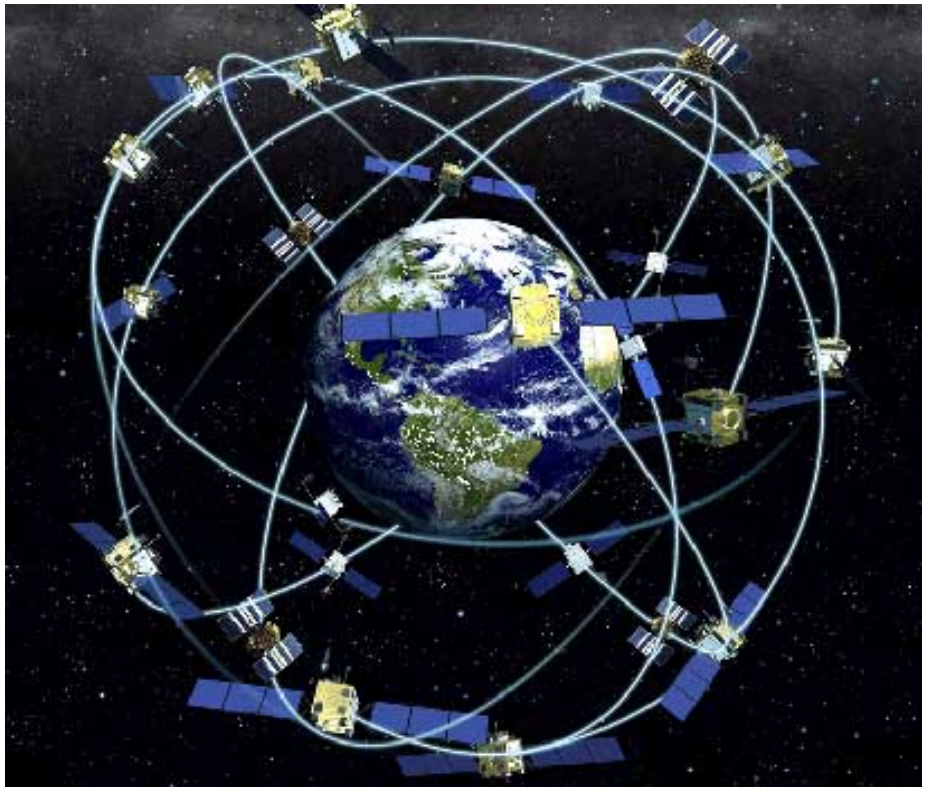

Schematic illustration of GPS satellite network

Global Positioning System

- Satellites equipped with atomic clocks (accurate within 1 nanosecond)
- Receiver: determine locations based on receiving ticks from satellites, triangulating
- Need accuracy of $20 - 30$ nanoseconds in measuring ticks to determine location

GR and GPS

- Relativistic effects
  - Special relativity: high velocity of satellites relative to observer
  - General relativity: gravitational time delay due to Earth's gravity
  - Total effect: about $37,000$ nanoseconds per day
  - Both effects have to be taken into account!

Solutions of the Field Equations

Einstein's Equations

$$\text{Curvature} = \kappa \text{ Mass-Energy Density}$$

- What does it take to solve these equations?
  - 10 coupled, non-linear, partial differential equations
  - Einstein: "Do not worry about your difficulties with mathematics, I can assure you that mine are still greater."
- Simplify, simplify, simplify...
  - Idealizations: make the mathematics tractable
  - But then do the idealized cases describe actual universe?

Norton's Analogy

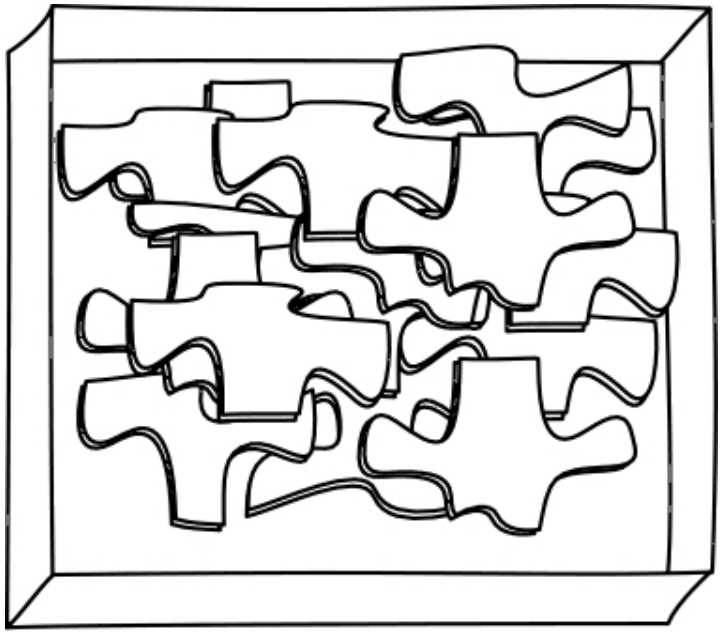

Einstein's equations: *local* constraints

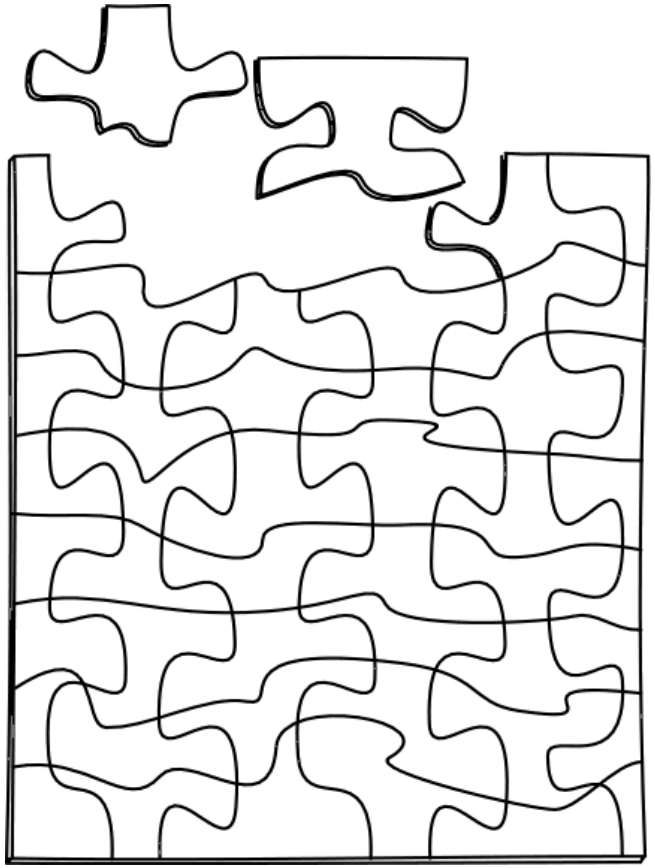

Assembling these local pieces into global solution

First Solution: Minkowski Spacetime

Einstein's Equations

$$\text{Curvature} = \kappa \text{Mass} - \text{Energy Density}$$

- Vacuum: mass-energy is *zero* everywhere
- One possible solution: curvature also *zero* everywhere
- *Minkowski spacetime*

Gravitational Field Around the Sun

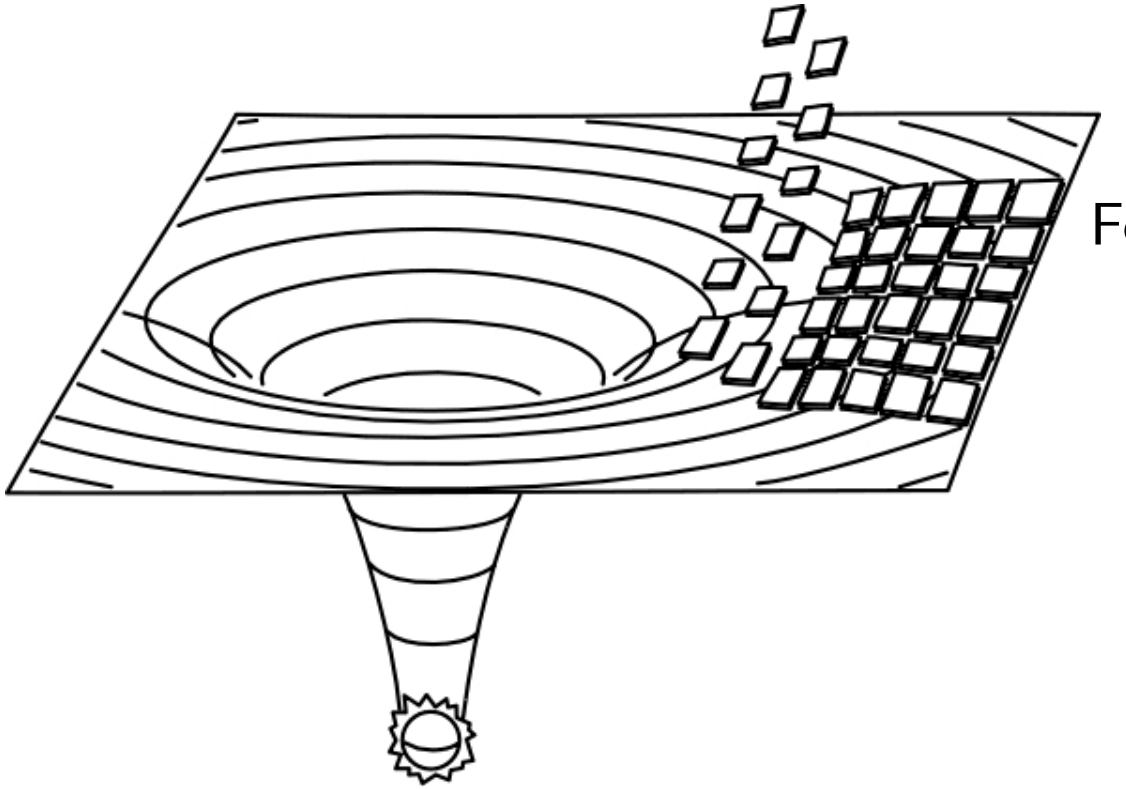

Features of the Solution

- Spherical Symmetry
- Approaches Minkowski space far away from Sun

Using the Schwarzschild Solution

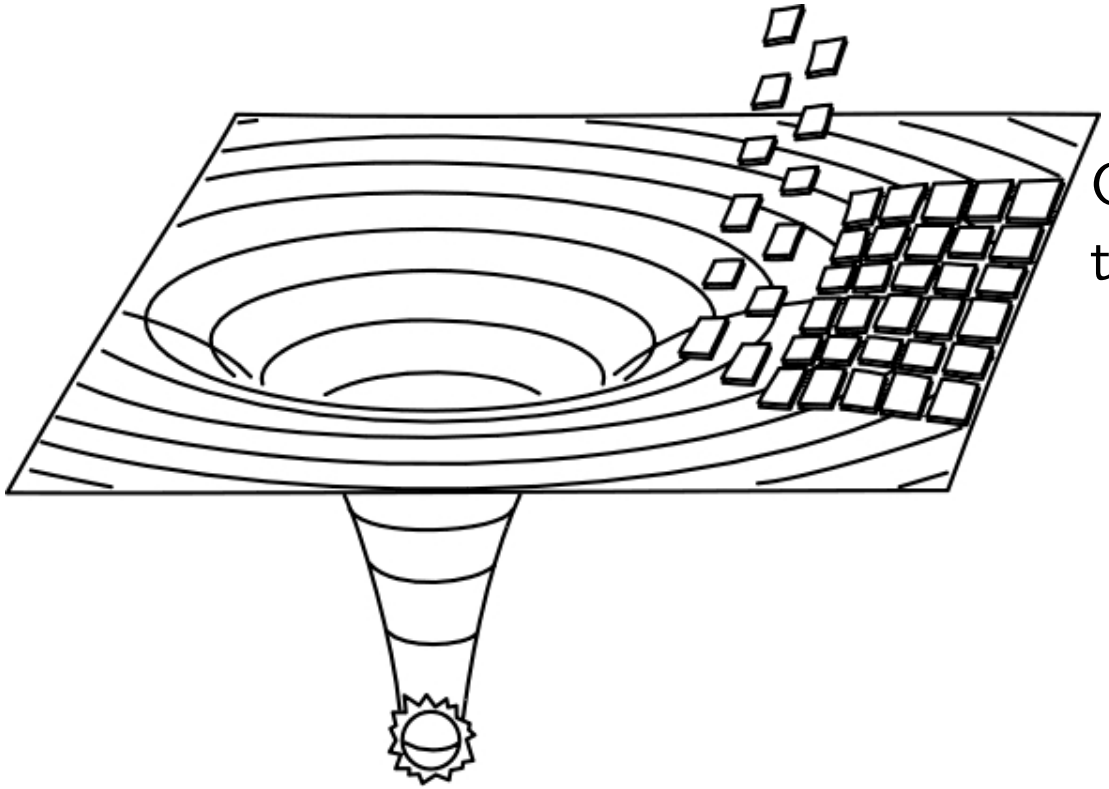

Calculations Based on this Solution

- Mercury's Orbit
- Light-bending
- Gravitational red-shift

What is a Cosmological Model?

- Scwharzschild Solution
  - Gravitational field near the sun, "local" description
  - Other solutions: other situations, e.g. different mass distribution
- Cosmological Model
  - Solution of Einstein's field equations for the universe as a whole
  - Large-scale structure of *entire universe*, global description

Milky Way

What is the structure of the Milky Way?

- Location of stars and other objects
- Origin and change over time

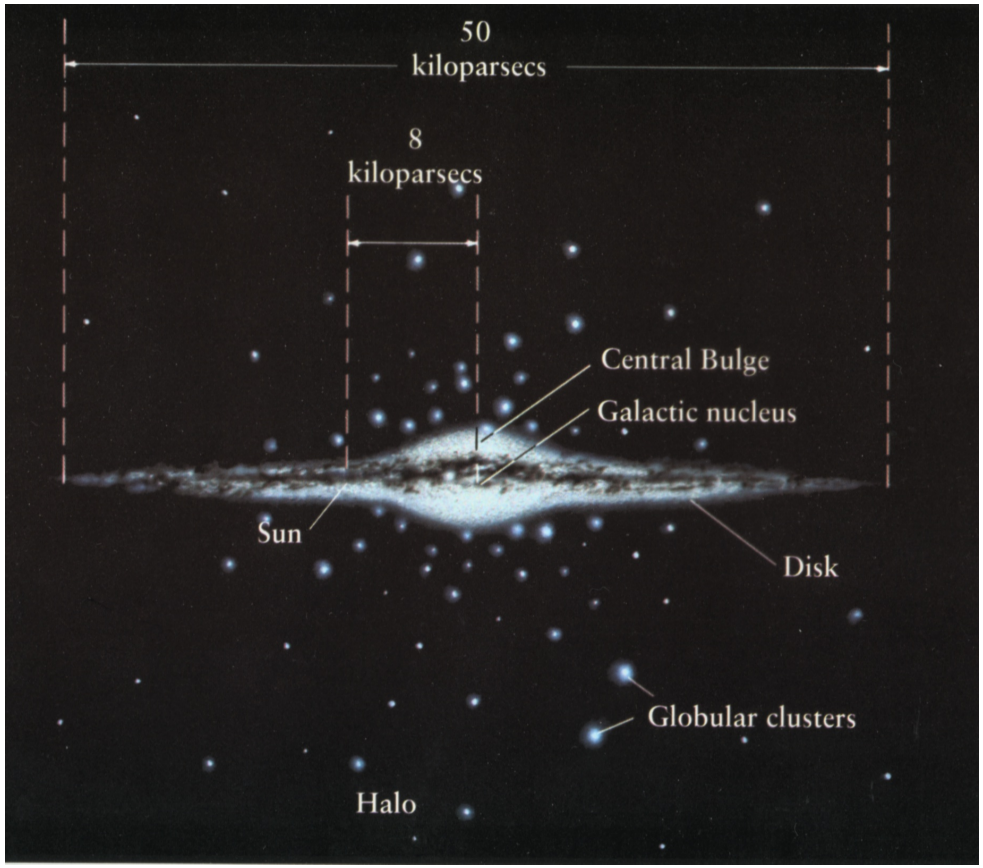

"Great Debate" (1921)

HST image of Andromeda, NGC 224

What are the spiral nebulae?

1. Parts of Milky Way (Shapley)
2. "Island universes" (Curtis)

Cosmology in 1915

- Descriptive Questions
  - How to establish nature and distance of astronomical objects?
  - Resolution of the Great Debate, in favor of island universe hypothesis
- Theoretical Questions: *Cosmogony*
  - How did these various complex structures come to exist?
  - Evolution of solar system, other structures

Dilemma for Newtonian Cosmology

Option A: Uniform Distribution of Matter

- Force appears to diverge (Bentley 1692)

Option B: "Island Universe"

- Evaporation argument: no stable distribution of matter, as stars "evaporate" and escape

Dilemma for Newtonian Cosmology

Option A: Uniform Distribution of Matter

Option B: "Island Universe"

Einstein's Conclusion

Newton's theory does not work for cosmology!

Modern Assessment

Can avoid Einstein's dilemma in geometrical version of Newton, or with hierarchical distribution of matter

Mach's Principle

- Guiding Principle on Path to General Relativity
  - Define inertia with respect to "distant stars": "... the sphere of fixed stars co-determines the mechanical behavior of my test masses"
  - Inertia due to interaction with other bodies (like gravity)
- Debates with De Sitter (1916-1918)
  - Does Mach's Principle actually hold?

Threats to Mach's Principle

1. Boundary Conditions at Infinity
   - Spacetime "at infinity" as a vestige of absolute space
2. Vacuum Solutions
   - Example: Minkowski spacetime
   - Spacetime structure without *any* matter

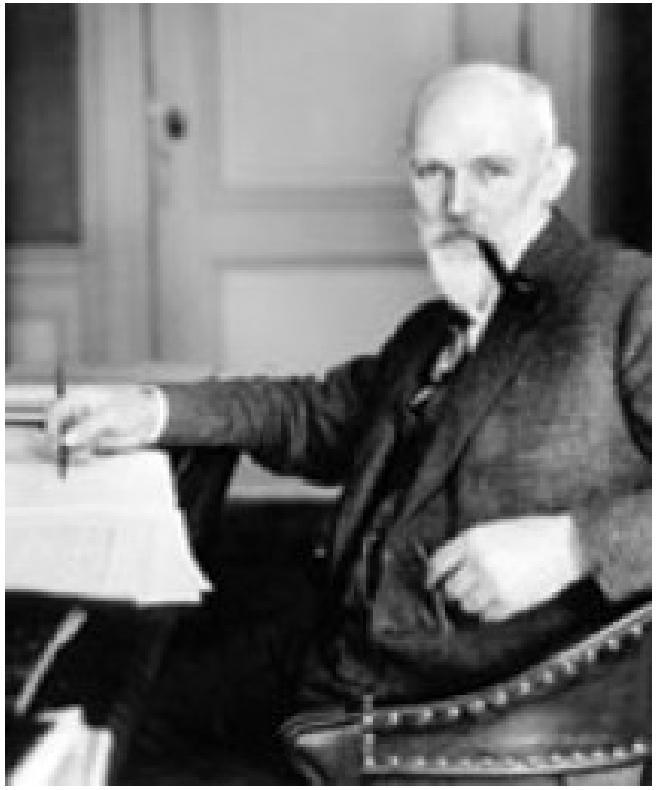

Willem De Sitter
(1872-1934)

- Status of Mach's Principle?

  There can be no inertia relative to 'space,' but only an inertia of masses relative to one another. (Einstein 1917)

- De Sitter: vestige of absolute space in Einstein's theory...

Einstein's Solution

- Problem: need to stipulate boundary conditions at infinity
- Solution: get rid of spatial infinity!
- Complication: This is no longer a solution of the original field equations!

The Cosmological Constant

kommen analog ist. Wir können nämlich auf der linken Seite der Feldgleichung (13) den mit einer vorläufig unbekannten universellen Konstante $-\lambda$ multiplizierten Fundamentaltensor $g_{\mu\nu}$ hinzufügen, ohne daß dadurch die allgemeine Kovarianz zerstört wird; wir setzen an die Stelle der Feldgleichung (13)

$$G_{\mu\nu} - \lambda g_{\mu\nu} = -\varkappa \left(T_{\mu\nu} - \frac{1}{2} g_{\mu\nu} T \right). \qquad (13\,a)$$

Auch diese Feldgleichung ist bei genügend kleinem λ mit den am Sonnensystem erlangten Erfahrungstatsachen jedenfalls vereinbar. Sie

Modified field equations:

- Additional Λ term not present in earlier version
- Checkered history of Λ

Einstein Static Spacetime

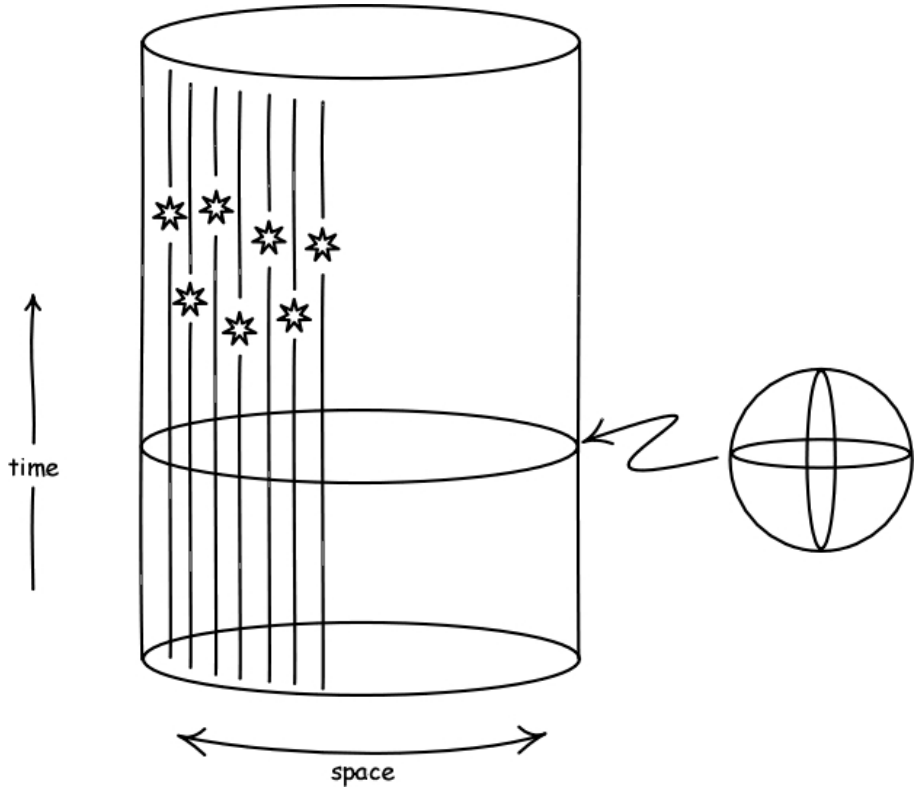

Properties of Einstein's Model

- Static: spatial geometry *time-independent*
  - (Weak) justification: low stellar velocities
  - De Sitter objects, but not in published papers
- Spatial Geometry: 3-D sphere in 4-D space
- Complication: This is no longer a solution of the original field equations!

Static Universe?

- Einstein's goal: describe a static universe without edges
- Problem:
  - Matter produces positive curvature
  - Leads to convergence of trajectories
  - ... *no longer static*

Modified Field Equations

Einstein's New Field Equations (1917)

$$\text{Curvature} + \Lambda = \kappa \text{Mass} - \text{Energy Density}$$

Consequences of Introducing Λ term?

- "Repulsive force"
- Allows static model with uniform mass distribution

Einstein's Biggest Blunder?

New York T

Sunday, August 30, 1917

Is the Universe Expanding?

Albert Einstein has recently predicted, based on his new theory of gravity called general relativity, that the universe is expanding. Astronomers were stunned by this prediction. Most of them regarded it as an indication that the theory must be incorrect.

Einstein's paper, "Cosmological Considerations in the General Theory of Relativity" (Einstein 1917b), is rightly regarded as the first step in modern theoretical cosmology. Perhaps the most striking novelty introduced by Einstein was the very idea of a cosmological model, an exact solution to his new gravitational field equations that gives a global description of the universe in its entirety. Einstein's paper inspired a small group of theorists to study cosmological models using his new gravitational theory, and the ideas developed during these early days have been a crucial part of cosmology ever since. We will see below that understanding the physical properties of these models and their possible connections to astronomical observations was the

What Einstein Missed

- *Prediction* of GR:

  ... that the universe evolves dynamically

  ... and is currently expanding
- Remarkable, shocking, unanticipated

Λ's Checkered History

- Einstein's Shifting Views
  - Introduced to save Mach's Principle
    ... *but it fails to do so*
  - Einstein (1919): "gravely detrimental to the formal beauty of the theory"
- Λ in Contemporary Cosmology
  - Account for accelerated expansion (?)

Model A vs. Model B

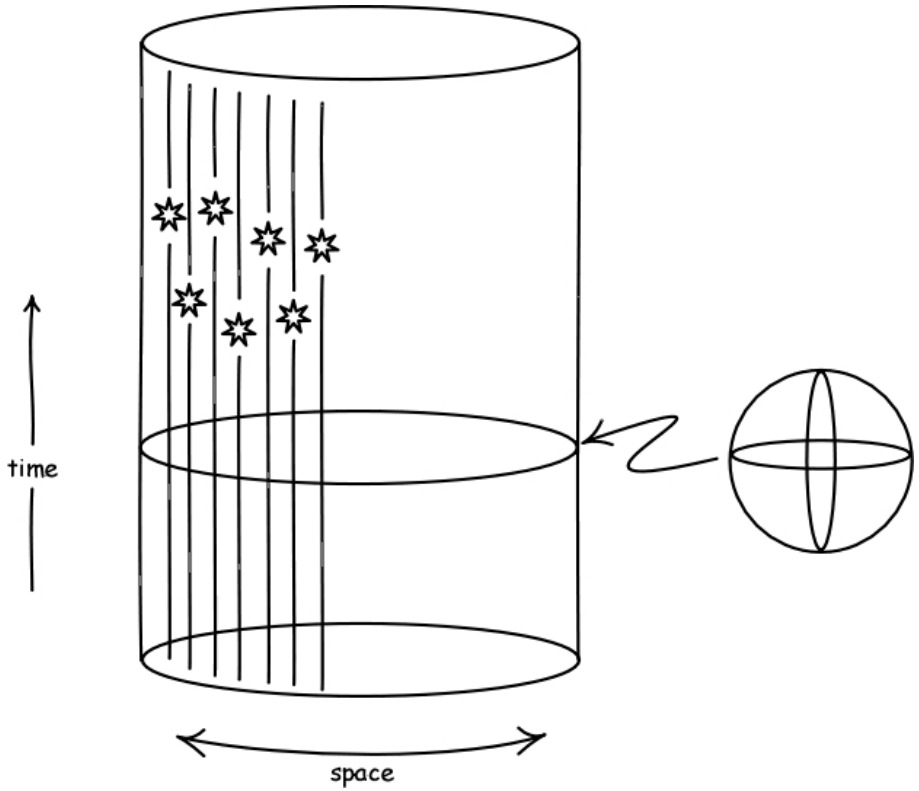

Model A: Einstein's Static Universe

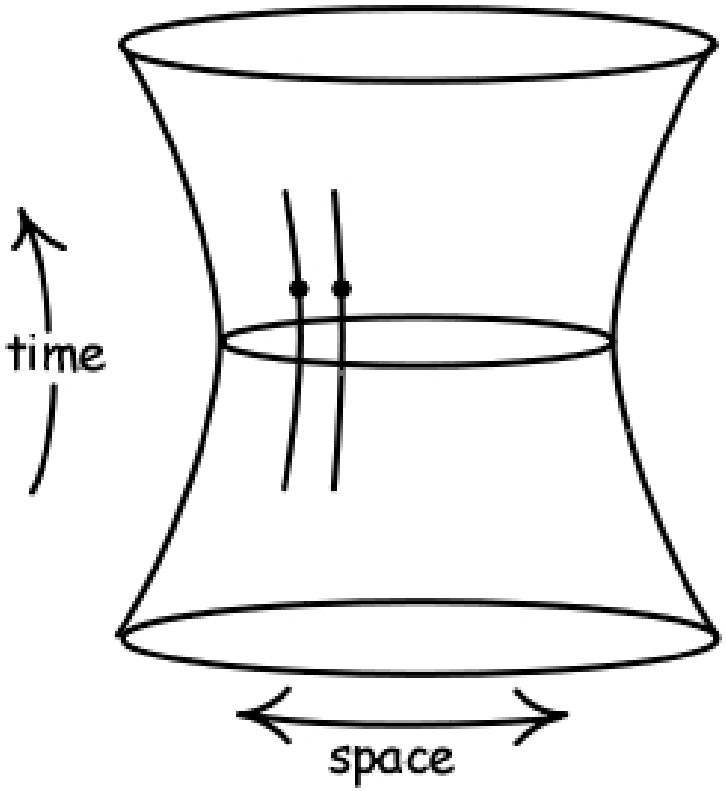

Model B: De Sitter's Vacuum Universe

Properties of De Sitter's Model

- Vacuum solution with Λ
- Non-Static, Evolving
- More Complicated!

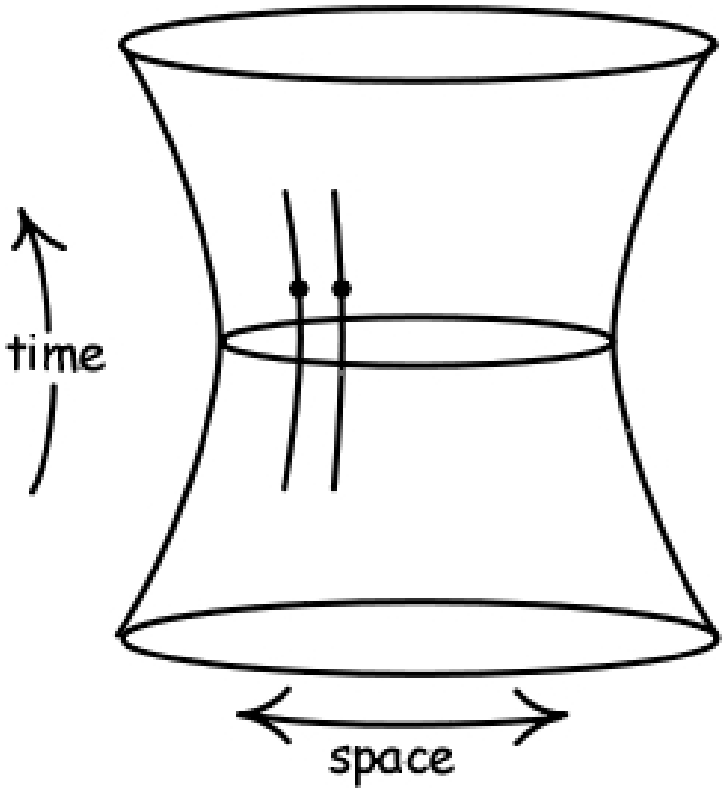

Model B: De Sitter's Vacuum Universe

Fate of Mach's Principle?

- Einstein introduced Λ to save Mach's Principle, but
- ... this is not necessary, only needed for *static* models
- ... not sufficient, as De Sitter's model shows (it is a *vacuum* solution)

Einstein-De Sitter Debate

1. What are the properties of these models?
   - General features
   - Observational consequences (e.g., cosmological red-shift)?
2. What makes a model "physically reasonable"?
   - Require only static models?
   - Existence of singularities?

End of the Debate

Shall we put a little motion into Einstein's world of inert matter, or shall we put a little matter into de Sitter's Primum Mobile? (Eddington 1930)

- These are not the only two options!
- ... (re)discovery of Expanding Universe Models

Gravitational Collapse

- Gravitational Instability
  - Collapse increases density $\rightarrow$ increases attraction $\rightarrow$ further collapse $\rightarrow$ ...
  - Various forces that counteract collapse: rigidity, kinetic energy, pressure
- Stellar collapse
  - Massive stars: *too much mass* for pressure to halt collapse, leads to formation of black holes

Spacetime Diagram of Collapse

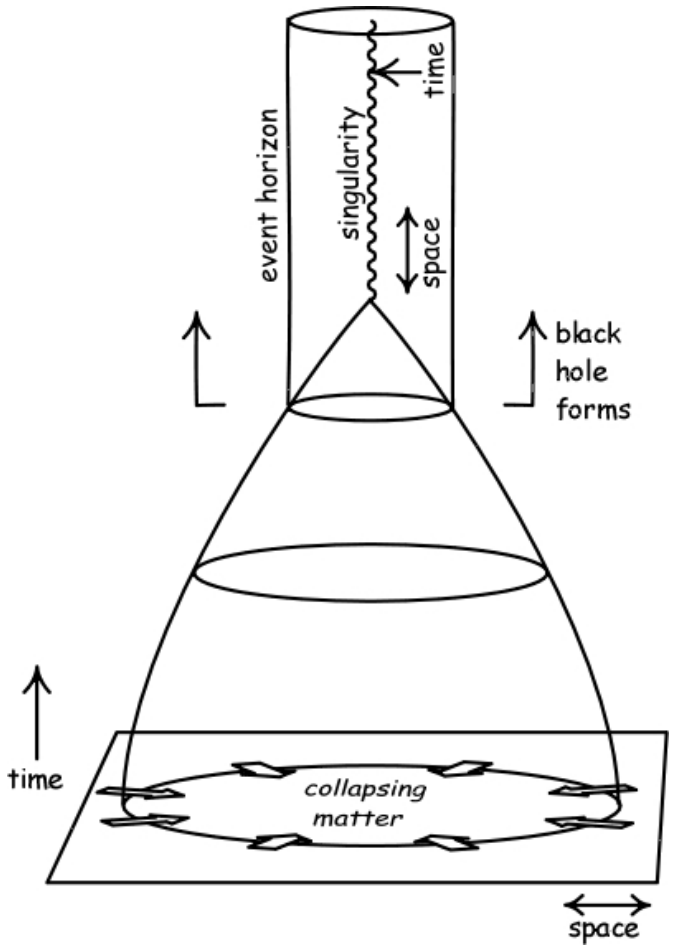

Spacetime Diagram of Black Hole

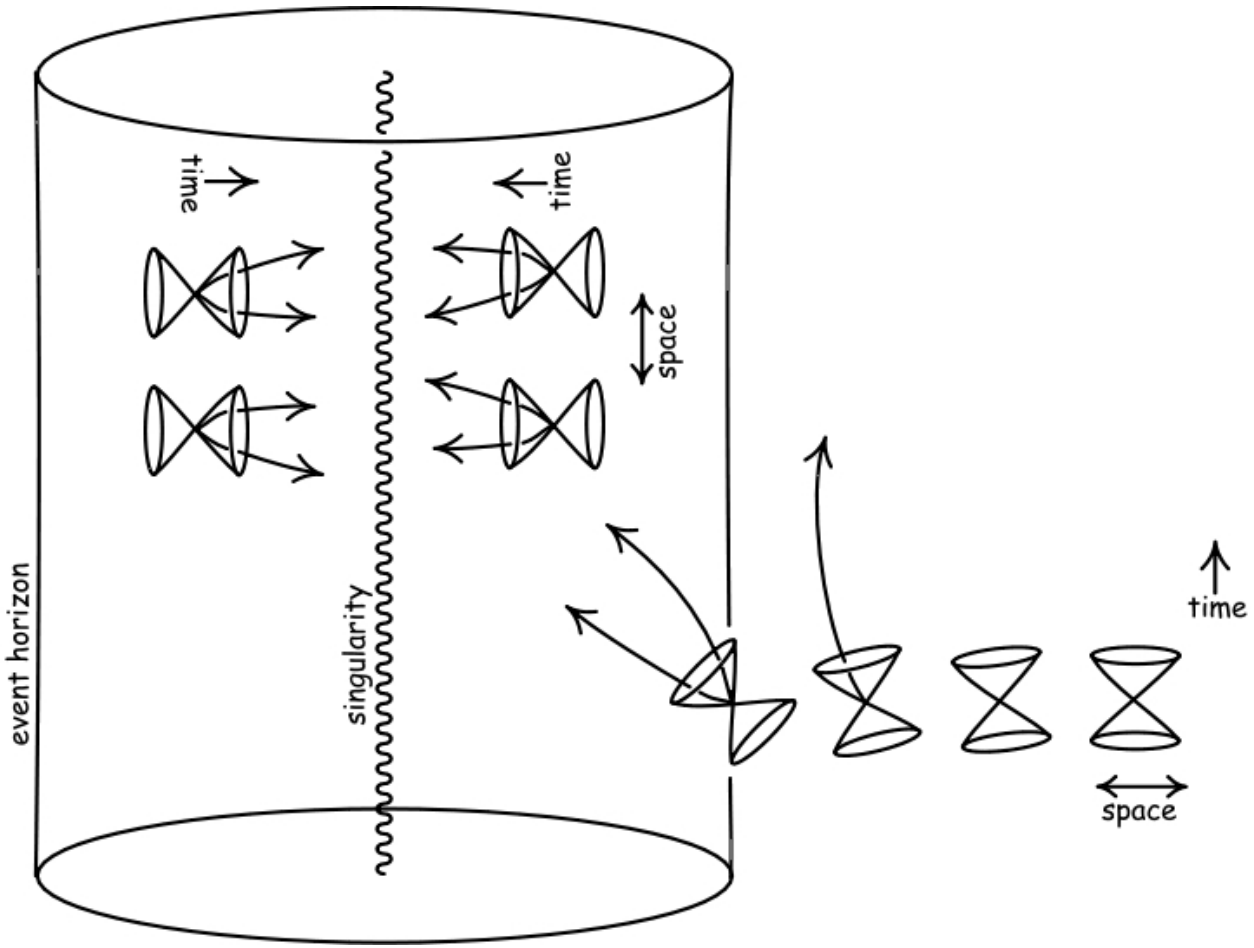

What is a Black Hole?

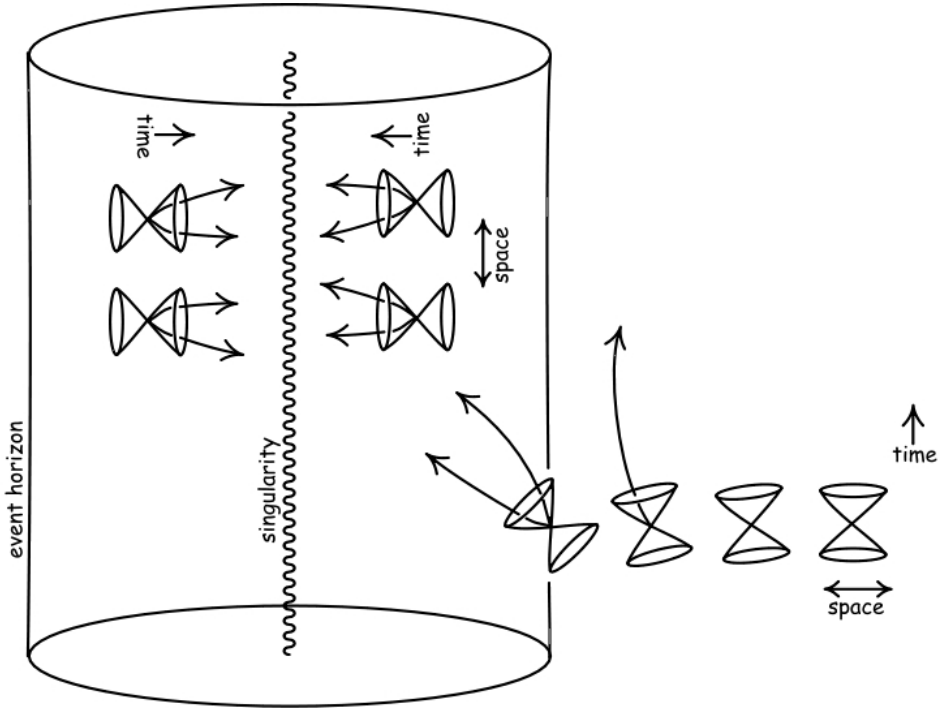

- Exterior Region
- Event Horizon
- Black Hole

Spacetime Diagram of Black Hole

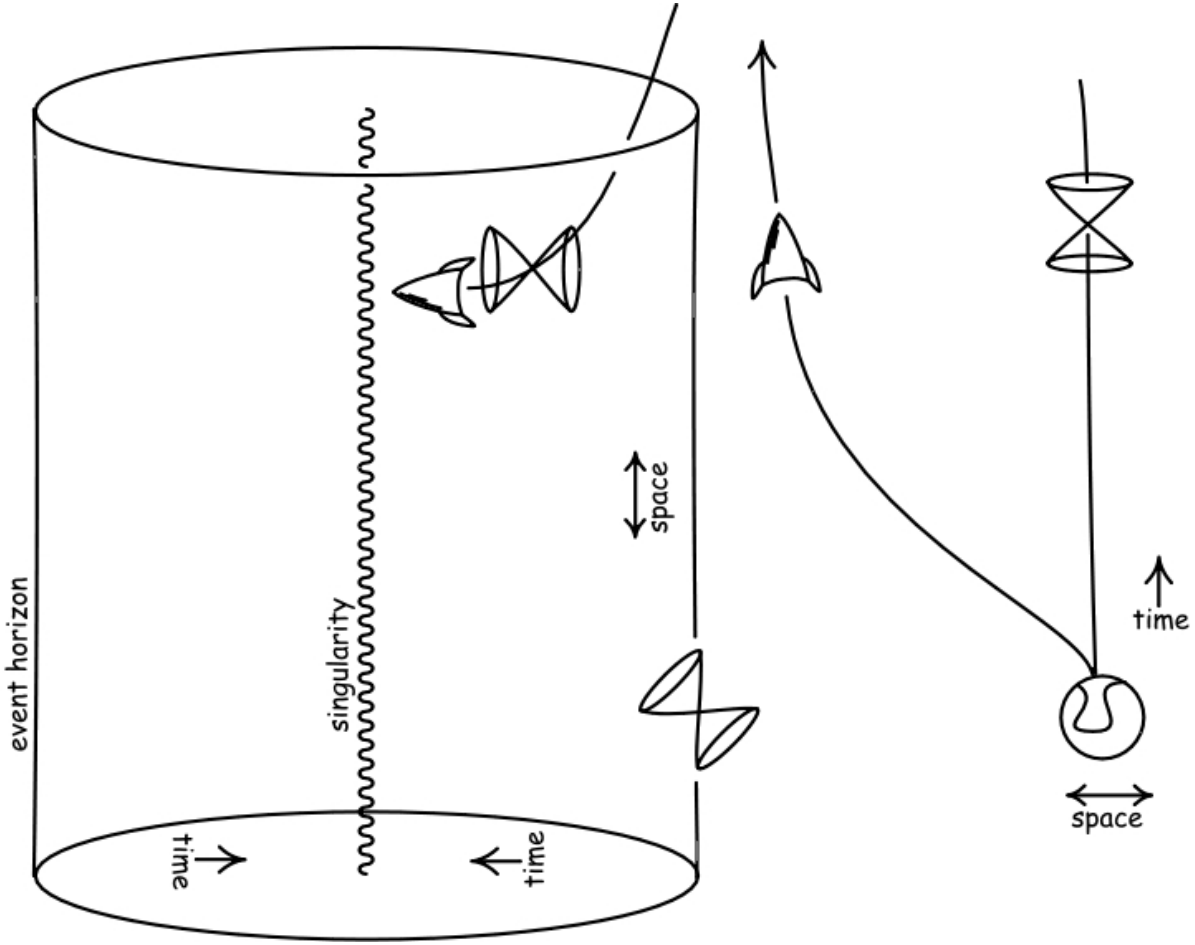

Al's Account

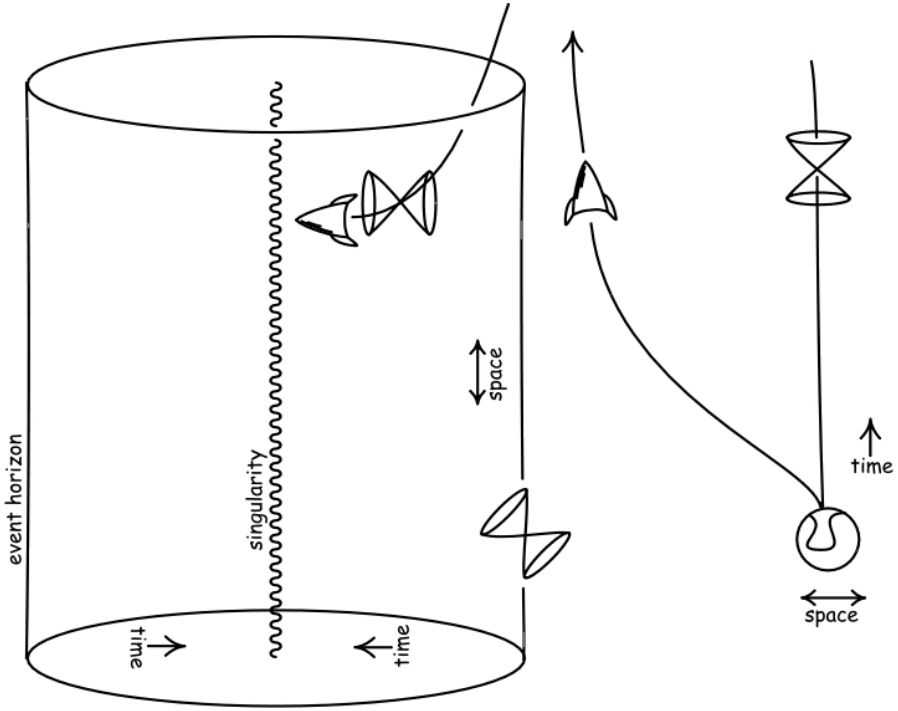

Al (safely at home):

- Bob approaches the event horizon...
- *... but never reaches it!*

Bob's Account

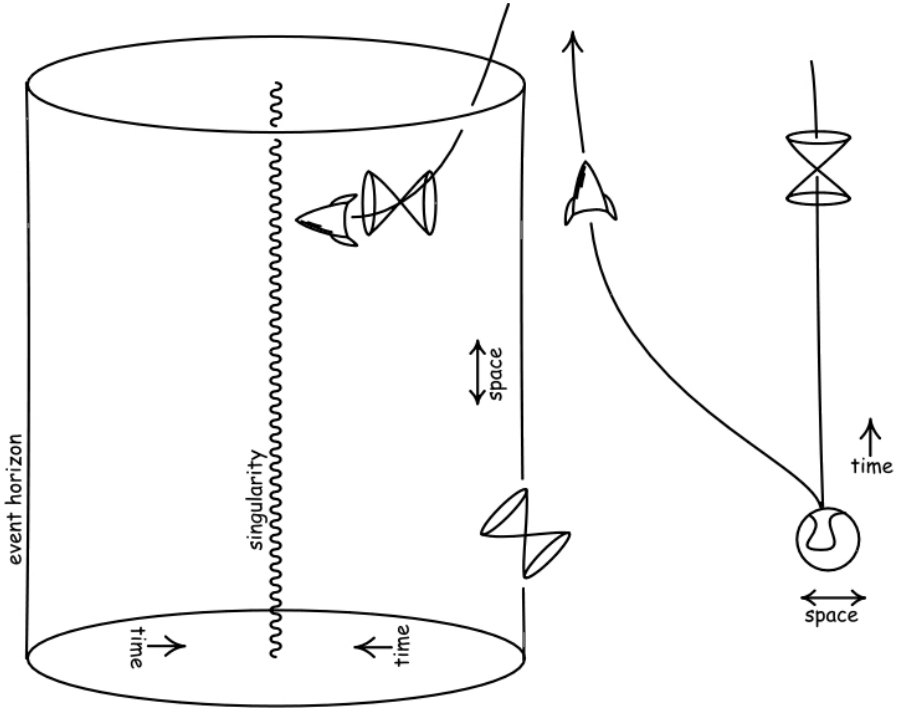

Bob (sacrifice for the sake of science):

- I approach the event horizon...
- *... and pass right through without noticing*

Problems

- Limitations of the Diagram
  - Bob's trajectory *drawn as a broken curve*
  - Spatial and temporal directions shift
- History of Black Holes
  - Need to use different ways of representing solution: in-falling vs. out-falling
  - Disagreements about nature of event horizon, singularities

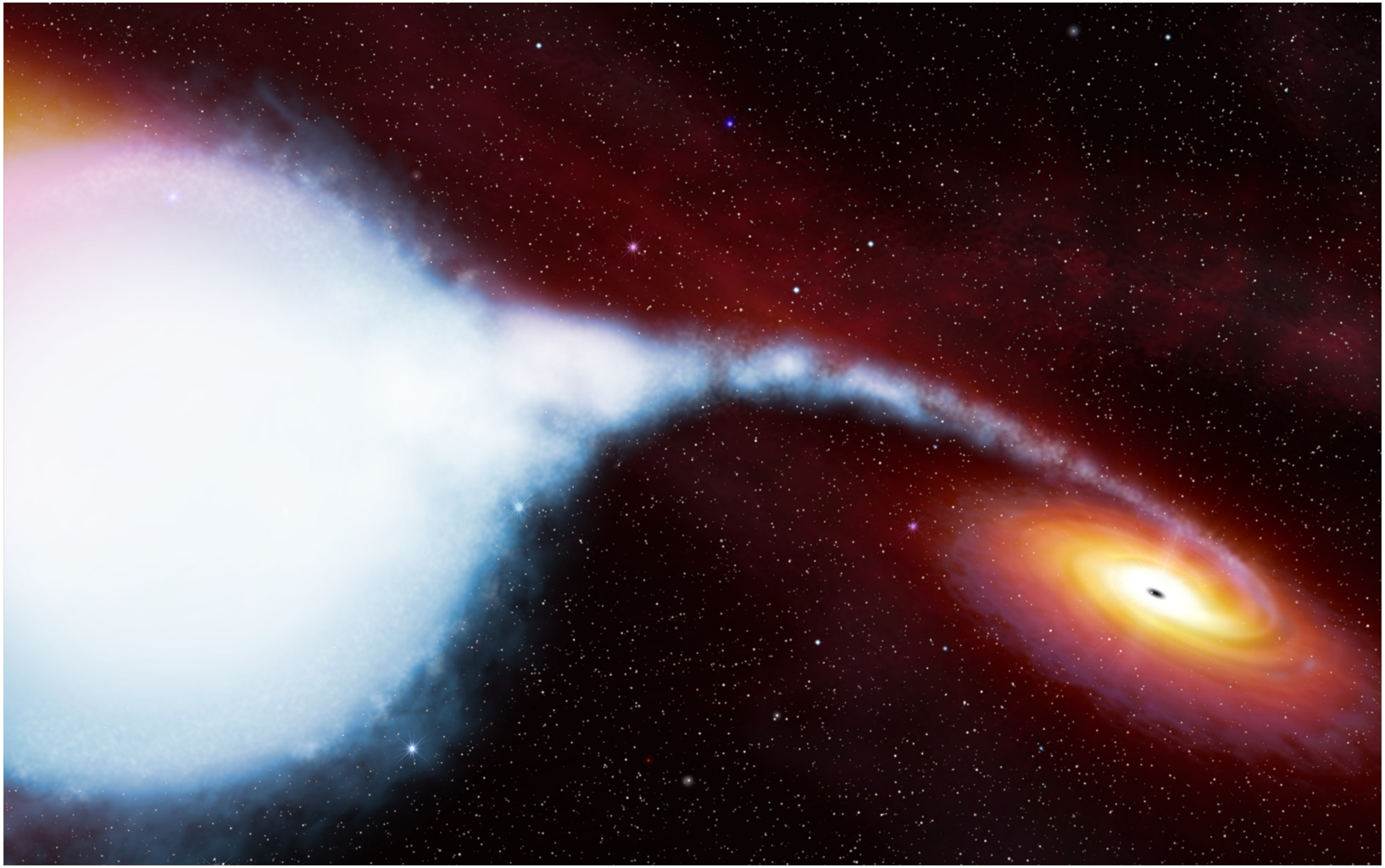

Observational Evidence

- Black Holes from Stellar Collapse
  - Binary systems (e.g. Cygnus X-1)
- Supermassive Black Holes
  - Located in the center of galaxies
  - *Quasars:* energy produced as matter falls into BH
  - *Our galaxy:* motion of stars near event horizon
- Other Black Holes?

Seeds of Destruction?

It seems that Einstein always was of the opinion that singularities in classical field theory are intolerable. They are intolerable because a singular region represents a breakdown of the postulated laws of nature. I think one can turn this around and say that a theory that involves singularities and involves them unavoidably, moreover, carries within itself the seeds of its own destruction. *(Bergmann 1980)*

Responses:

- Einsteinian response: artifact of symmetries (*ruled out by singularity theorems*)
- Clarification 1: inconsistency, empirical inadequacy, or incompleteness?
- Clarification 2: Black holes, singularities, "naked" singularities

Nature Abhors a Singularity?

> *From a purely philosophical standpoint it is difficult to believe that physical singularities are a fundamental and unavoidable feature of our universe. On the contrary, when faced with a theory which predicts the evolution of a singular state, one is inclined to discard or modify that theory rather than accept the suggestion that the singularity actually occurs in nature. (Thorne 1967, p. 415)*

Singularities as a "false prediction"?

- Black holes: crucial part of empirical success of GR, variety of astrophysical applications
- Contrast between singularities / naked singularities?

Naked Singularities

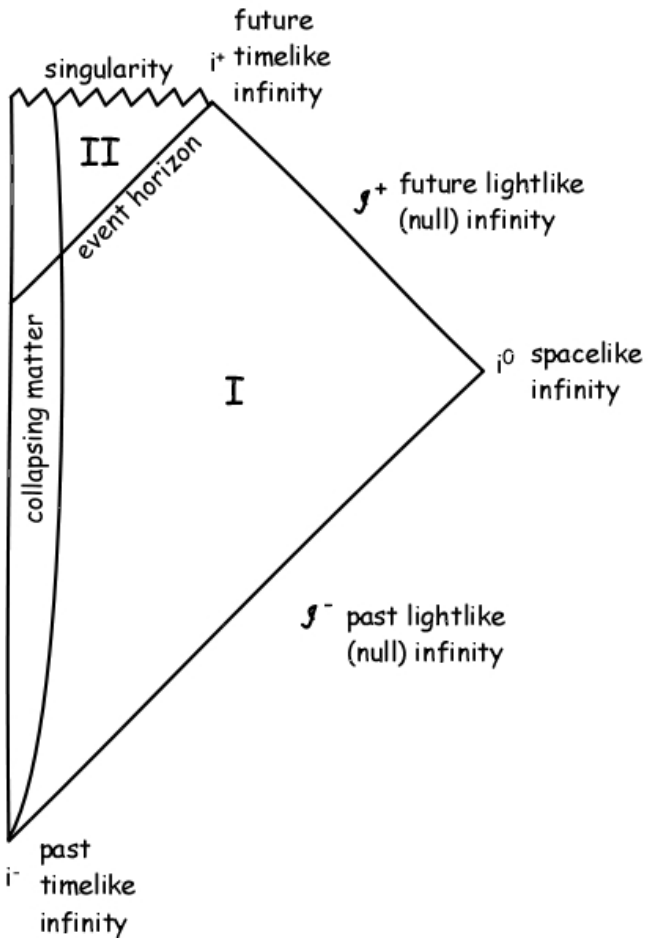

Naked Singularity

- No Event Horizon
- "Visible" Singularity

How did Einstein do it?

1. Where is there friction or tension between different theories?
   - Different fields and theories within physics: electromagnetism, mechanics, thermodynamics (theory of heat), ...
2. What is not needed from our current theories?
   - How well grounded are fundamental concepts?
3. What aspects of current theory demand further explanation?
   - What ideas should be central in new theory?

Einstein's Achievement: Special Relativity

1. Where is there friction or tension between different theories?
   - Mechanics and Electromagnetism: what is the status of the relativity principle? Does light carry energy and momentum? ...
2. What is not needed from our current theories?
   - Newtonian assumptions about space and time *conflict* with electromagnetism...
   - But new concepts of space and time *compatible* with success of mechanics
3. What aspects of current theory demand further explanation?
   - Avoid introducing theoretical distinctions not present in the phenomena

Einstein's Achievement: General Relativity

1. Where is there friction or tension between different theories?
   - Special relativity / electromagnetism and gravity
2. What is not needed from our current theories?
   - Do not need to describe gravity as instantaneous action-at-a-distance
   - Spacetime as fixed background structure
3. What aspects of current theory demand further explanation?
   - Principle of equivalence